Extension 20 mm -

12 070 970 90

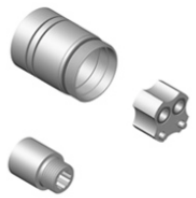

Extension 20 mm -

12 070 970 90

Extension 20 mm -

12 070 970 90

mm [inches]

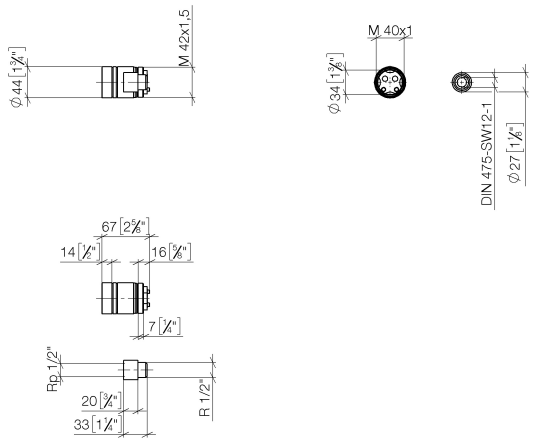

Codes & Standards

NSF372

Certificates

IAPMO_6

Extension 20 mm -

12 070 970 90

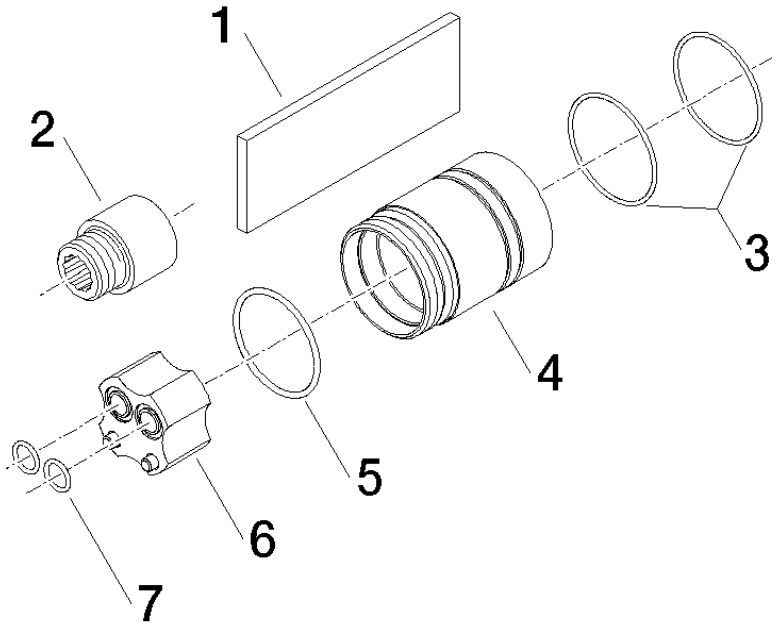

Spare parts list

No.	Item Number	Name	Quantity used	Delivery time
2	09 24 03 072 10 90	nipple	1	2
3	09 14 10 190 90	seal	2	2
5	09 14 10 034 90	seal	1	2
7	09 14 10 042 90	seal	2	2

We reserve the right to change designs, product range and technical specifications without prior notice.
More information can be found at: www.dornbracht.com +49 (0) 2371 8899 900 mail@dornbracht.com